Cambridge Assessment International Education

Cambridge International AS & A Level

CANDIDATE NAME	

CENTRE NUMBER						CANDIDATE NUMBER				

7045060753

PHYSICS **9702/33**

Paper 3 Advanced Practical Skills 1 **February/March 2023**

2 hours

You must answer on the question paper.

You will need: The materials and apparatus listed in the confidential instructions

INSTRUCTIONS

- Answer **all** questions.
- Use a black or dark blue pen. You may use an HB pencil for any diagrams or graphs.
- Write your name, centre number and candidate number in the boxes at the top of the page.
- Write your answer to each question in the space provided.
- Do **not** use an erasable pen or correction fluid.
- Do **not** write on any bar codes.
- You will be allowed to work with the apparatus for a maximum of 1 hour for each question.
- You should record all your observations in the spaces provided in the question paper as soon as these observations are made.
- You may use a calculator.
- You should show all your working and use appropriate units.

INFORMATION

- The total mark for this paper is 40.
- The number of marks for each question or part question is shown in brackets [ ].

For Examiner's Use	
1	
2	
Total	

This document has **12** pages.

© UCLES 2023
[Turn over

You may not need to use all of the materials provided.

1 In this experiment, you will investigate the equilibrium of a wooden rod.

(a) (i) • Assemble the apparatus as shown in Fig. 1.1 with the nail held securely in the cork. Check that the rod can swing freely.

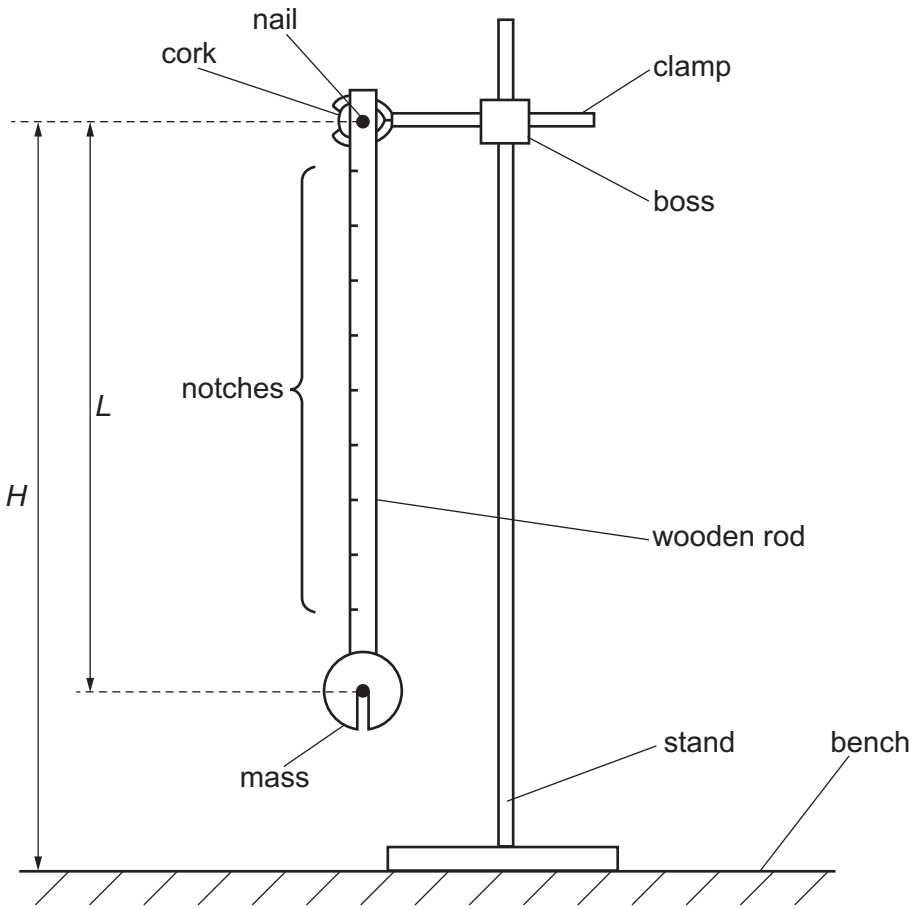

Fig. 1.1

• The height of the nail above the bench is *H*.
Measure and record *H*.

H = ...

This height must be **kept constant** throughout the experiment.

• The distance between the nail and the centre of the mass is *L*.
Measure and record *L*.

L = ...
[1]

(ii) • Assemble the remaining apparatus as shown in Fig. 1.2. Place the string loop in a notch near the mid-point of the rod.

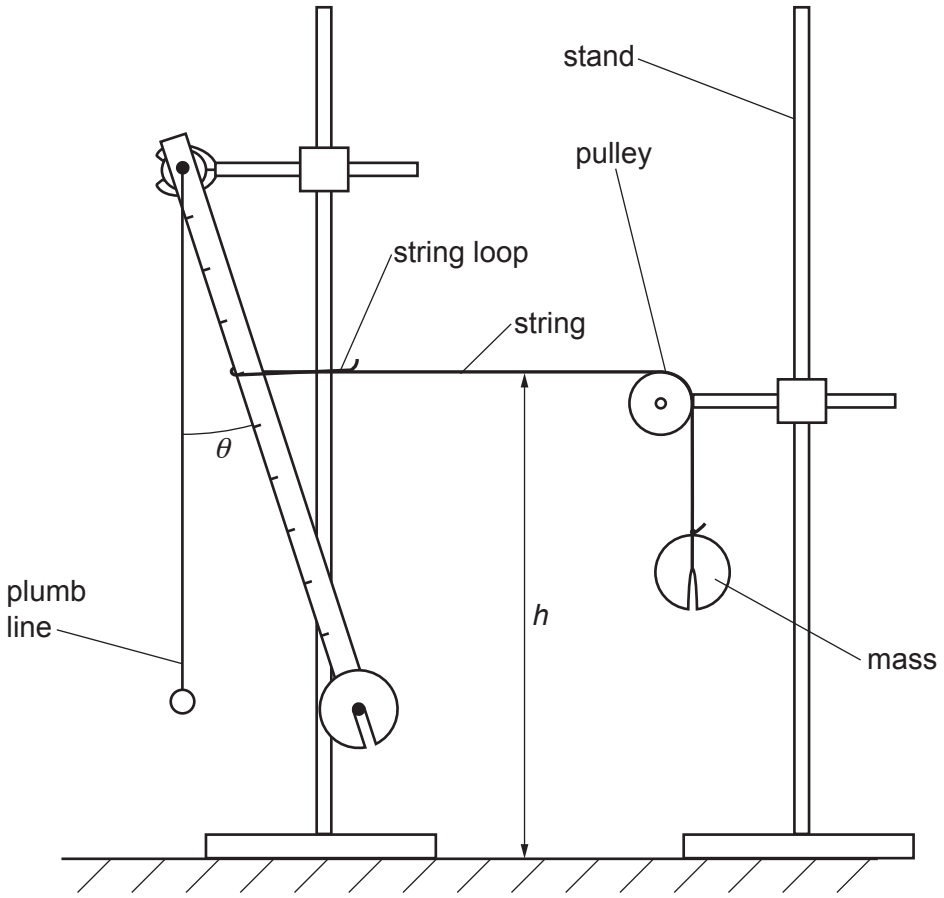

Fig. 1.2

• Adjust the height of the pulley so that the string pulling the rod is parallel to the bench.

• The height of the string above the bench is h, as shown in Fig. 1.2.
Measure and record h.

h = ...

• The angle between the plumb line and the rod is θ, as shown in Fig. 1.2.
Measure and record θ.

θ = ... °
[1]

(b) Move the string loop to another notch and adjust the height of the pulley and the position of its stand so that the string pulling the rod is parallel to the bench.

Repeat until you have six sets of values of h and θ.

Record your results in a table. Include values of $\sin\theta$ to 3 significant figures in your table.

[9]

(c) **(i)** Plot a graph of $\sin\theta$ on the y-axis against h on the x-axis. [3]

(ii) Draw the straight line of best fit. [1]

(iii) Determine the gradient and y-intercept of this line.

gradient = ...

y-intercept = ...

[2]

© UCLES 2023

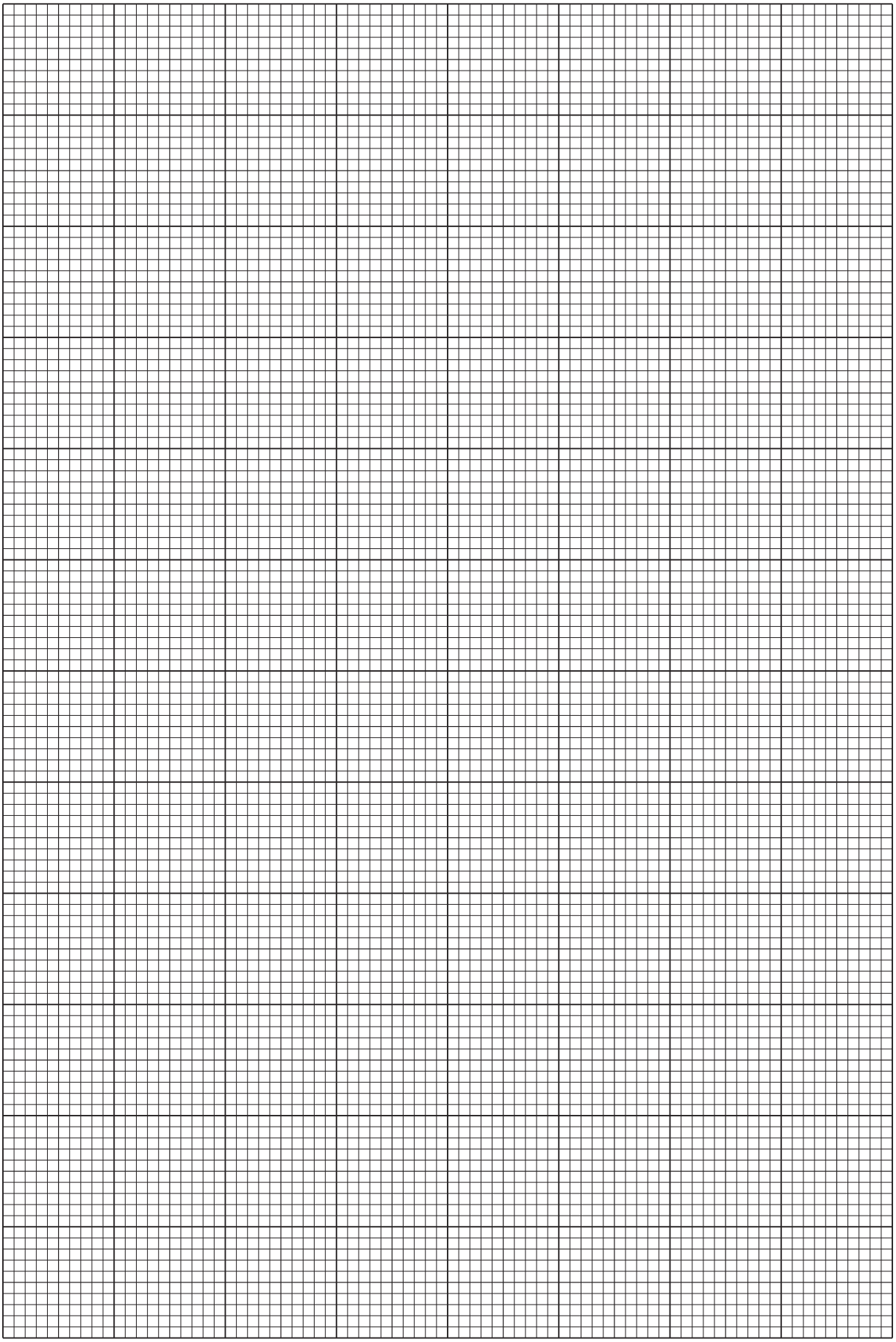

(d) It is suggested that the quantities θ and h are related by the equation

$$\sin\theta = a\,h + b$$

where a and b are constants.

Using your answers in **(c)(iii)**, determine the values of a and b.
Give appropriate units.

a = ...

b = ...
[2]

(e) The mass of the wooden rod is M.
Calculate M using the relationship

$$-\frac{1}{a} = L + \frac{ML}{N}$$

where N is 200 g.

M = ... g [1]

[Total: 20]

© UCLES 2023

You may not need to use all of the materials provided.

2 In this experiment, you will investigate the properties of sugar solution.

(a) • Assemble the apparatus as shown in Fig. 2.1.

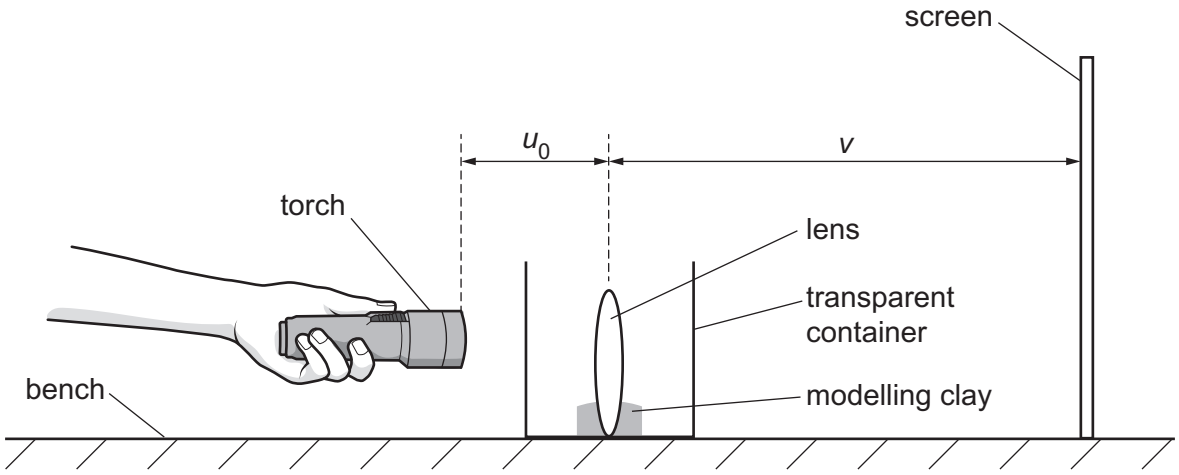

Fig. 2.1

• The distance from the screen to the centre of the lens is v, as shown in Fig. 2.1. Adjust the apparatus so that v is approximately 40 cm.

Measure and record v.

v = ... cm

• Switch on the torch and shine the light through the lens. An image of the LEDs in the torch will appear on the screen.

• Adjust the distance of the torch from the lens until the image of the LEDs is as sharp as possible.
The distance from the front of the torch to the centre of the lens when the image is as sharp as possible is u_0, as shown in Fig. 2.1.

Measure and record u_0.

u_0 = ... cm
[2]

(b) (i) • You have been provided with a beaker labelled **Sugar Concentration 0.18**. Pour the sugar solution into the transparent container until the lens is **just** covered, as shown in Fig. 2.2.
Check that v is still approximately 40 cm.

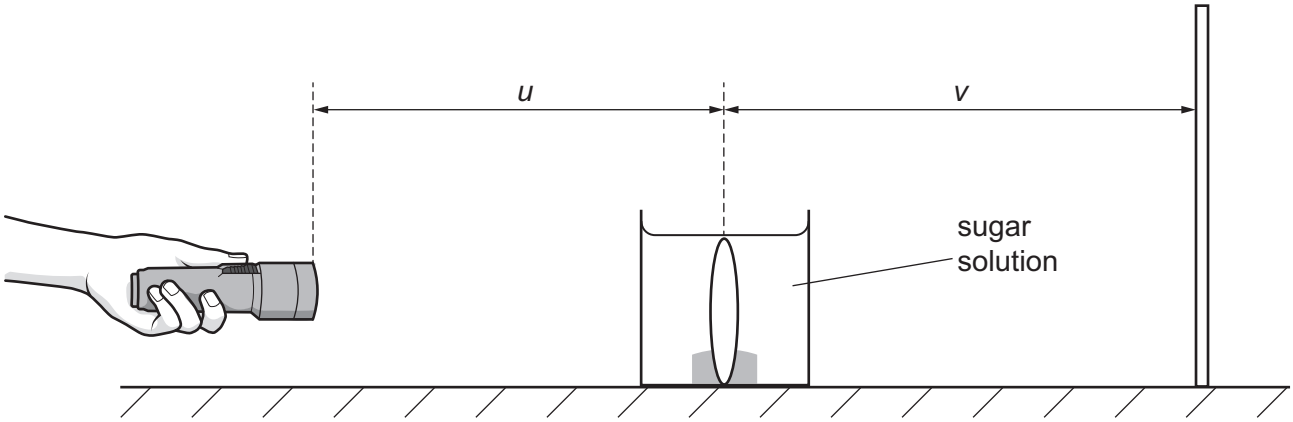

Fig. 2.2

• Adjust the position of the torch until it shows a sharp image of the LEDs on the screen.

Measure and record the distances v and u.

v = ... cm

u = ... cm
[1]

(ii) Estimate the percentage uncertainty in your value of u. Show your working.

percentage uncertainty = ...% [1]

© UCLES 2023

(iii) • The combination of the lens and the sugar solution has a focal length f.
Calculate f using the expression

$$f = \frac{vu}{(v + u)}.$$

f = ... cm

• The sugar solution has a refractive index n.
Calculate n using the expression

$$n = \frac{0.553f}{1 + 0.333f}.$$

n = ...
[2]

• Pour all the sugar solution back into the beaker labelled **Sugar Concentration 0.18**.

(iv) Justify the number of significant figures you have given for your value of n.

.....

.....

..... [1]

(c) Repeat **(b)(i)** and **(b)(iii)** using liquid from the beaker labelled **Sugar Concentration 0.33** to find the refractive index n of this solution.

v = ... cm

u = ... cm

f = ... cm

n = ...
[3]

© UCLES 2023

(d) The sugar concentration in the sugar solution is C.
It is suggested that the relationship between n and C is given by

$$k = \frac{n - 1.31}{C}$$

where k is a constant.

Using your data, calculate **two** values of k.

first value of k = ...

second value of k = ...
[1]

(e) It is suggested that the percentage uncertainty in the values of k is 20%.
Using this uncertainty, explain whether your results support the relationship in **(d)**.

.....

.....

..... [1]

(f) (i) Describe **four** sources of uncertainty or limitations of the procedure for this experiment.

For any uncertainties in measurement that you describe, you should state the quantity being measured and the reason for the uncertainty.

1 .....

.....

2 .....

.....

3 .....

.....

4 .....

.....

[4]

(ii) Describe **four** improvements that could be made to this experiment. You may suggest the use of other apparatus or different procedures.

1 .....

.....

2 .....

.....

3 .....

.....

4 .....

.....

[4]

[Total: 20]

Permission to reproduce items where third-party owned material protected by copyright is included has been sought and cleared where possible. Every reasonable effort has been made by the publisher (UCLES) to trace copyright holders, but if any items requiring clearance have unwittingly been included, the publisher will be pleased to make amends at the earliest possible opportunity.

To avoid the issue of disclosure of answer-related information to candidates, all copyright acknowledgements are reproduced online in the Cambridge Assessment International Education Copyright Acknowledgements Booklet. This is produced for each series of examinations and is freely available to download at www.cambridgeinternational.org after the live examination series.

Cambridge Assessment International Education is part of Cambridge Assessment. Cambridge Assessment is the brand name of the University of Cambridge Local Examinations Syndicate (UCLES), which is a department of the University of Cambridge.